Advanced micro lab

Lab report 1

Convolution

Shams Tarek
Aya Elbakri
Hanna Mounir

Task 1:

Kernel size: 3×3
Input size: 6x6
Data format:

- **Activations (cells):** signed **8-bit** two's complement, written over GPIO (carried in a 32-bit write).
- **Weights:** signed **8-bit** two's complement, written over GPIO.
- **Output/result:** signed **32-bit** two's complement

Block design:

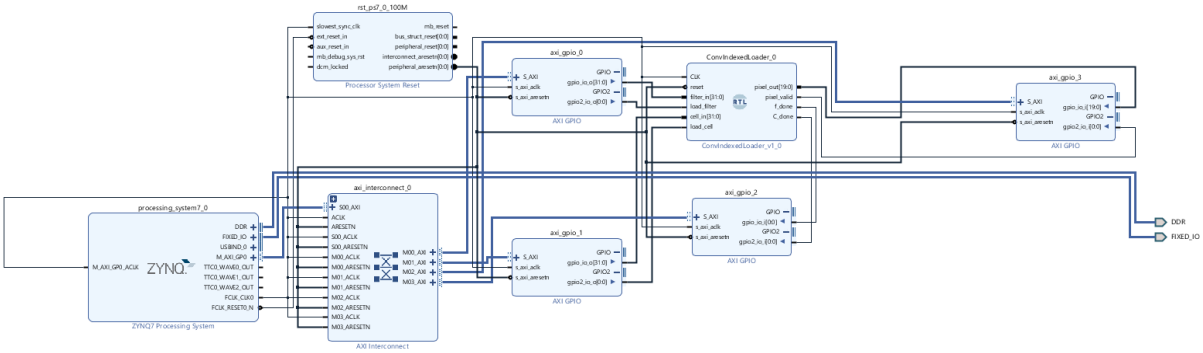

Simulation:

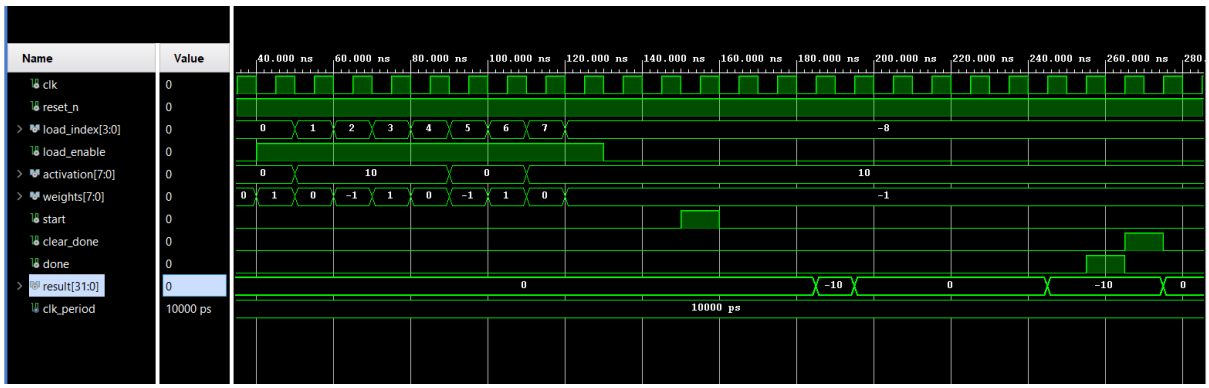

Timming Report:

Design Timing Summary

Setup		Hold		Pulse Width	
Worst Negative Slack (WNS):	7.866 ns	Worst Hold Slack (WHS):	0.040 ns	Worst Pulse Width Slack (WPWS):	9.020 ns
Total Negative Slack (TNS):	0.000 ns	Total Hold Slack (THS):	0.000 ns	Total Pulse Width Negative Slack (TPWS):	0.000 ns
Number of Failing Endpoints:	0	Number of Failing Endpoints:	0	Number of Failing Endpoints:	0
Total Number of Endpoints:	3990	Total Number of Endpoints:	3990	Total Number of Endpoints:	1805

All user specified timing constraints are met.

Name	Waveform	Period (ns)	Frequency (MHz)
clk_fpga_0	{0.000 10.000}	20.000	50.000

Power:

Summary

Power analysis from Implemented netlist. Activity derived from constraints files, simulation files or vectorless analysis.

Total On-Chip Power:	**1.675 W**
Design Power Budget:	**Not Specified**
Power Budget Margin:	**N/A**
Junction Temperature:	**44.3°C**
Thermal Margin:	40.7°C (3.4 W)
Effective ϑJA:	11.5°C/W
Power supplied to off-chip devices:	0 W
Confidence level:	Medium

Launch Power Constraint Advisor to find and fix invalid switching activity

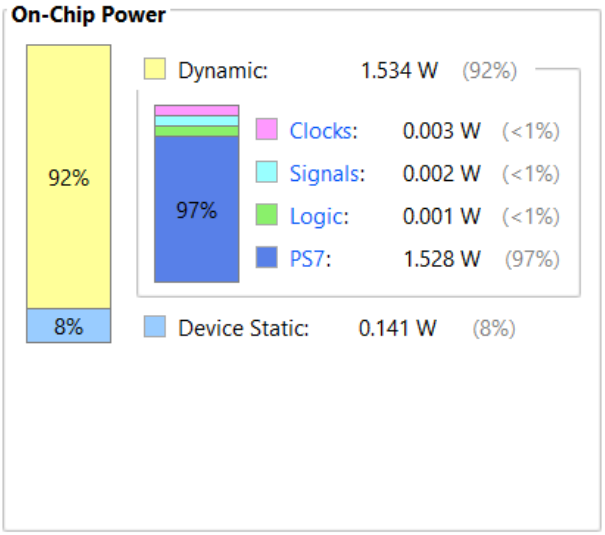

Area:

Name	Slice LUTs (53200)	Slice Registers (106400)	F7 Muxes (26600)	F8 Muxes (13300)	Slice (13300)	LUT as Logic (53200)	LUT as Memory (17400)	Bonded IOPADs (130)	BUFGCTRL (32)
design_1_wrapper	1199	1738	53	26	522	1137	62	130	1
design_1_i (design_1)	1199	1738	53	26	522	1137	62	0	1

Vitis terminal:

```
Starting full feature map computation

-30   0   0   30

-30   0   0   30

-30   0   0   30

-30   0   0   30

Feature map complete
```

Task 2:

Kernel size: 10×4
Input size: 49x10

In this task, we implemented a CNN-based keyword spotting model using convolution layers with a filter size of 10×4. The execution time was measured both in software (CPU-only) and using an FPGA-based hardware implementation through GPIO. While the software version achieved a runtime of approximately 181 ms, the hardware version using GPIO interfacing took around 6583.7 ms significantly slower than expected. This discrepancy is due to the overhead of serially writing inputs and weights over the GPIO interface and waiting for each output, which dominates the execution time despite the FPGA's parallel processing capabilities. Therefore, although the FPGA logic itself is capable of accelerating convolution operations, the current software-hardware interface severely limits performance. To realize true hardware acceleration, a more efficient data transfer approach, such as AXI-streaming, DMA or on-chip memory buffering, is required.

CNN with software only:

```
Prediction index = 4

Predicted label = up

Full CNN processing time: 181.189 ms
```

CNN with accelerator:

```
Prediction index = 11

Predicted label  = go

Turning LED on
Turning LED off
Processing Time  = 6583.741858 ms
```

LED on when output is “GO”:

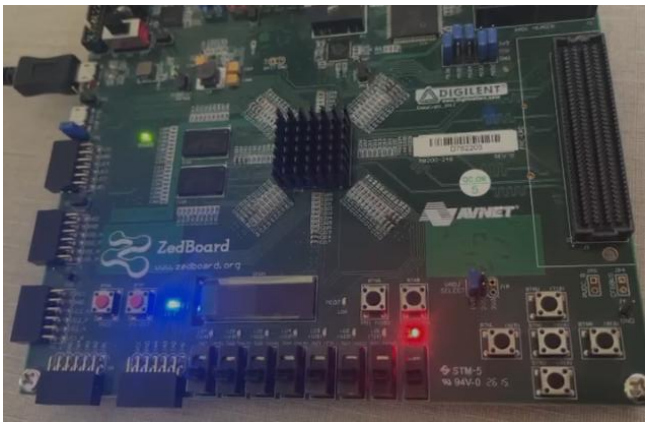

Design RTL CNN

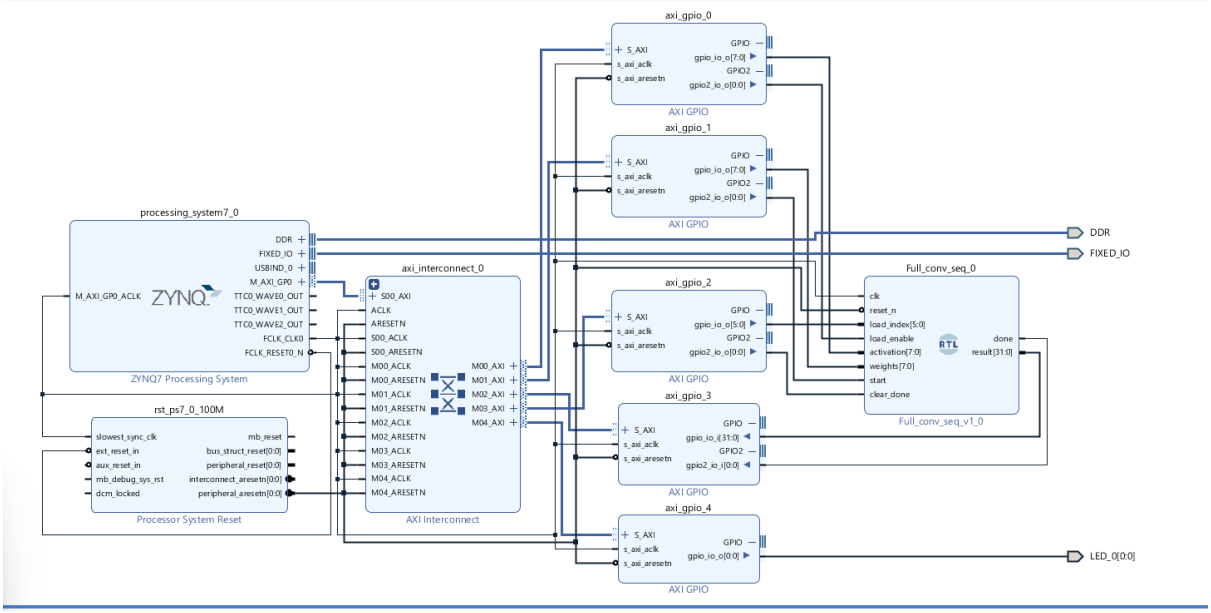

Timing RTL CNN

Setup		Hold		Pulse Width	
Worst Negative Slack (WNS):	13.423 ns	Worst Hold Slack (WHS):	0.045 ns	Worst Pulse Width Slack (WPWS):	11.520 ns
Total Negative Slack (TNS):	0.000 ns	Total Hold Slack (THS):	0.000 ns	Total Pulse Width Negative Slack (TPWS):	0.000 ns
Number of Failing Endpoints:	0	Number of Failing Endpoints:	0	Number of Failing Endpoints:	0
Total Number of Endpoints:	4814	Total Number of Endpoints:	4814	Total Number of Endpoints:	2095

All user specified timing constraints are met.

Clock Summary

Name	Waveform	Period (ns)	Frequency (MHz)
clk_fpga_0	{0.000 12.500}	25.000	40.000

Power RTL CNN

Summary

Power estimation from Synthesized netlist. Activity derived from constraints files, simulation files or vectorless analysis. Note: these early estimates can change after implementation.

Total On-Chip Power:	**1.677 W**
Design Power Budget:	**Not Specified**
Power Budget Margin:	**N/A**
Junction Temperature:	**44.3°C**
Thermal Margin:	40.7°C (3.4 W)
Effective ϑJA:	11.5°C/W
Power supplied to off-chip devices:	0 W
Confidence level:	Medium

Launch Power Constraint Advisor to find and fix invalid switching activity

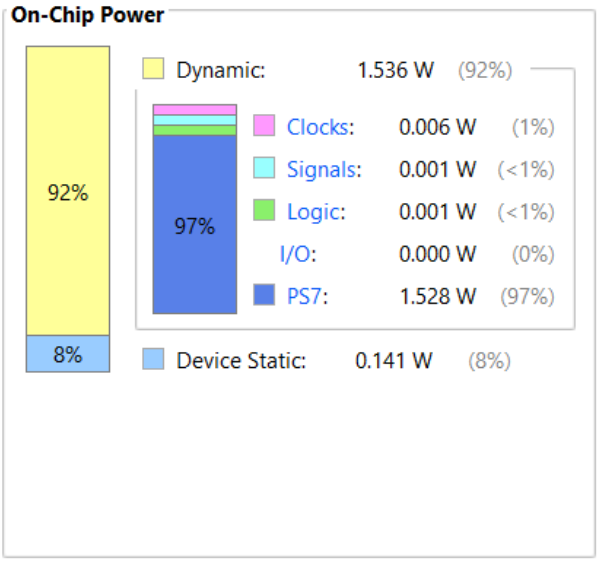

Area RTL CNN

Reports | Design Runs | Timing | Utilization

Hierarchy

Name	Slice LUTs (53200)	Slice Registers (106400)	F7 Muxes (26600)	F8 Muxes (13300)	Bonded IOB (200)	Bonded IOPADs (130)	BUFGCTRL (32)
design_1_wrapper	1420	2028	79	32	1	130	1
design_1_i (design_1)	1420	2028	79	32	0	0	1